1-of-8 Decoder/Demultiplexer

MC74AC138, MC74ACT138

The MC74AC138/74ACT138 is a high−speed 1−of−8 decoder/demultiplexer. This device is ideally suited for high−speed bipolar memory chip select address decoding.

The multiple input enables allow parallel expansion to a 1−of−24 decoder using just three MC74AC138/74ACT138 devices or a 1−of−32 decoder using four MC74AC138/74ACT138 devices and one inverter.

- Demultiplexing Capability
- Multiple Input Enable for Easy Expansion
- Active LOW Mutually Exclusive Outputs
- Outputs Source/Sink 24 mA
- ′ACT138 Has TTL Compatible Inputs
- These are Pb−Free Devices

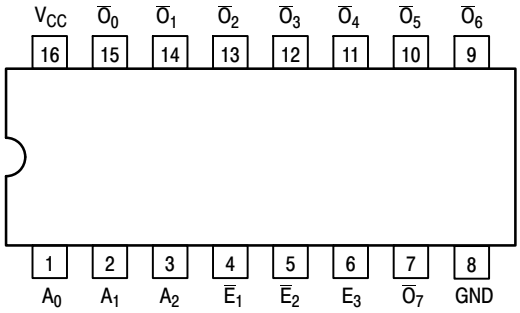

Figure 1. Pinout: 16−Lead Packages Conductors
(Top View)

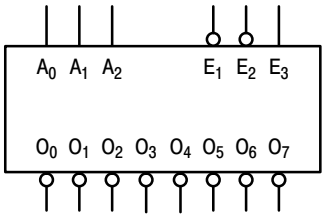

Figure 2. Logic Symbol

PIN ASSIGNMENT

PIN	FUNCTION
A_0−A_2	Address Inputs
$\overline{E}_1$−$\overline{E}_2$	Enable Inputs
E_3	Enable Input
$\overline{O}_0$−$\overline{O}_7$	Outputs

MARKING DIAGRAMS

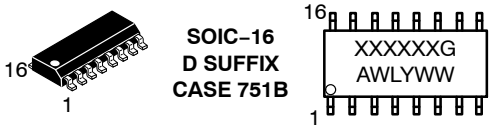

SOIC−16
D SUFFIX
CASE 751B

TSSOP−16
DT SUFFIX
CASE 948F

XXX	= Specific Device Code
A	= Assembly Location
WL, L	= Wafer Lot
Y	= Year
WW, W	= Work Week
G or ▪	= Pb−Free Package

(Note: Microdot may be in either location)

ORDERING INFORMATION

See detailed ordering and shipping information in the package dimensions section on page 7 of this data sheet.

© Semiconductor Components Industries, LLC, 2015

February, 2024 − Rev. 8
Publication Order Number:
MC74AC138/D

FUNCTIONAL DESCRIPTION

The MC74AC138/74ACT138 high−speed 1−of−8 decoder/demultiplexer accepts three binary weighted inputs (A_0, A_1, A_2) and, when enabled, provides eight mutually exclusive active−LOW outputs ($\overline{O}_0$–$\overline{O}_7$). The MC74AC138/74ACT138 features three Enable inputs, two active−LOW ($\overline{E}_1$, $\overline{E}_2$) and one active−HIGH (E_3). All outputs will be HIGH unless $\overline{E}_1$ and $\overline{E}_2$ are LOW and E_3 is HIGH. This multiple enabled function allows easy parallel expansion of the device to a 1−of−32 (5 lines to 32 lines) decoder with just four MC74AC138/74ACT138 devices and one inverter (See Figure 4). The MC74AC138/74ACT138 can be used as an 8−output demultiplexer by using one of the active LOW Enable inputs as the data input and the other Enable inputs as strobes. The Enable inputs which are not used must be permanently tied to their appropriate active−HIGH or active−LOW state.

TRUTH TABLE

Inputs						Outputs							
$\overline{E}_1$	$\overline{E}_2$	E_3	A_0	A_1	A_2	$\overline{O}_0$	$\overline{O}_1$	$\overline{O}_2$	$\overline{O}_3$	$\overline{O}_4$	$\overline{O}_5$	$\overline{O}_6$	$\overline{O}_7$
H	X	X	X	X	X	H	H	H	H	H	H	H	H
X	H	X	X	X	X	H	H	H	H	H	H	H	H
X	X	L	X	X	X	H	H	H	H	H	H	H	H
L	L	H	L	L	L	L	H	H	H	H	H	H	H
L	L	H	H	L	L	H	L	H	H	H	H	H	H
L	L	H	L	H	L	H	H	L	H	H	H	H	H
L	L	H	H	H	L	H	H	H	L	H	H	H	H
L	L	H	L	L	H	H	H	H	H	L	H	H	H
L	L	H	H	L	H	H	H	H	H	H	L	H	H
L	L	H	L	H	H	H	H	H	H	H	H	L	H
L	L	H	H	H	H	H	H	H	H	H	H	H	L

H = HIGH Voltage Level
L = LOW Voltage Level
X = Immaterial

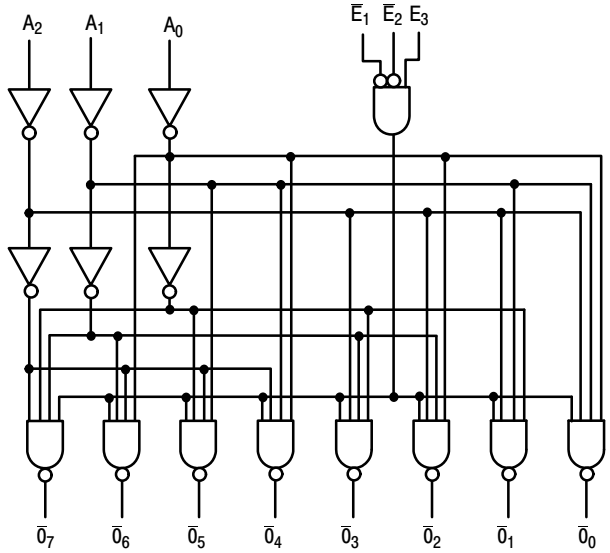

NOTE: This diagram is provided only for the understanding of logic operations and should not be used to estimate propagation delays.

Figure 3. Logic Diagram

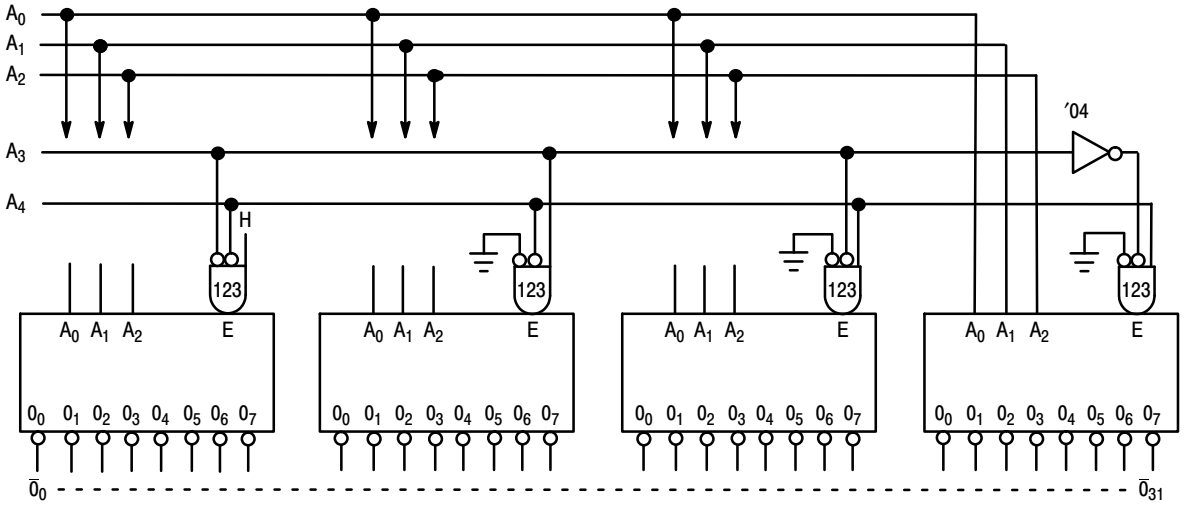

Figure 4. Expansion to 1−of−32 Decoding

MAXIMUM RATINGS

Symbol	Parameter		Value	Unit
V_{CC}	DC Supply Voltage		−0.5 to +6.5	V
V_I	DC Input Voltage		$-0.5 \le V_I \le V_{CC} + 0.5$	V
V_O	DC Output Voltage	(Note 1)	$-0.5 \le V_O \le V_{CC} + 0.5$	V
I_{IK}	DC Input Diode Current		±20	mA
I_{OK}	DC Output Diode Current		±50	mA
I_O	DC Output Sink/Source Current		±50	mA
I_{CC}	DC Supply Current per Output Pin		±50	mA
I_{GND}	DC Ground Current per Output Pin		±50	mA
T_{STG}	Storage Temperature Range		−65 to +150	°C
T_L	Lead temperature, 1 mm from Case for 10 Seconds		260	°C
T_J	Junction temperature under Bias		+150	°C
θ_{JA}	Thermal Resistance (Note 2)	SOIC TSSOP	126 159	°C/W
P_D	Power Dissipation in Still Air at 25°C (Note 3)	SOIC TSSOP	995 787	mW
MSL	Moisture Sensitivity		Level 1	
F_R	Flammability Rating	Oxygen Index: 30% – 35%	UL 94 V–0 @ 0.125 in	
V_{ESD}	ESD Withstand Voltage	Human Body Model (Note 4) Charged Device Model (Note 5)	> 2000 > 1000	V
$I_{Latch-Up}$	Latch–Up Performance	Above V_{CC} and Below GND at 85°C (Note 6)	±100	mA

Stresses exceeding those listed in the Maximum Ratings table may damage the device. If any of these limits are exceeded, device functionality should not be assumed, damage may occur and reliability may be affected.

1. I_O absolute maximum rating must be observed.
2. The package thermal impedance is calculated in accordance with JESD51–7.
3. 500 mW at 65°C; derate to 300 mW by 10 mW/ from 65°C to 85°C.
4. Tested to EIA/JESD22–A114–A.
5. Tested to JESD22–C101–A.
6. Tested to EIA/JESD78.

RECOMMENDED OPERATING CONDITIONS

Symbol	Parameter		Min	Typ	Max	Unit
V_{CC}	Supply Voltage	′AC	2.0	5.0	6.0	V
		′ACT	4.5	5.0	5.5	
V_{IN}, V_{OUT}	DC Input Voltage, Output Voltage (Ref. to GND)		0	–	V_{CC}	V
t_r, t_f	Input Rise and Fall Time (Note 1) ′AC Devices except Schmitt Inputs	V_{CC} @ 3.0 V	–	150	–	ns/V
		V_{CC} @ 4.5 V	–	40	–	
		V_{CC} @ 5.5 V	–	25	–	
t_r, t_f	Input Rise and Fall Time (Note 2) ′ACT Devices except Schmitt Inputs	V_{CC} @ 4.5 V	–	10	–	ns/V
		V_{CC} @ 5.5 V	–	8.0	–	
T_A	Operating Ambient Temperature Range		–40	25	85	°C
I_{OH}	Output Current – High		–	–	–24	mA
I_{OL}	Output Current – Low		–	–	24	mA

Functional operation above the stresses listed in the Recommended Operating Ranges is not implied. Extended exposure to stresses beyond the Recommended Operating Ranges limits may affect device reliability.

1. V_{IN} from 30% to 70% V_{CC}; see individual Data Sheets for devices that differ from the typical input rise and fall times.
2. V_{IN} from 0.8 V to 2.0 V; see individual Data Sheets for devices that differ from the typical input rise and fall times.

DC CHARACTERISTICS

Symbol	Parameter	V_{CC} (V)	74AC T_A = +25°C Typ	74AC T_A = +25°C Guaranteed Limits	74AC T_A = −40°C to +85°C Guaranteed Limits	Unit	Conditions
V_{IH}	Minimum High Level Input Voltage	3.0 4.5 5.5	1.5 2.25 2.75	2.1 3.15 3.85	2.1 3.15 3.85	V	V_{OUT} = 0.1 V or V_{CC} − 0.1 V
V_{IL}	Maximum Low Level Input Voltage	3.0 4.5 5.5	1.5 2.25 2.75	0.9 1.35 1.65	0.9 1.35 1.65	V	V_{OUT} = 0.1 V or V_{CC} − 0.1 V
V_{OH}	Minimum High Level Output Voltage	3.0 4.5 5.5	2.99 4.49 5.49	2.9 4.4 5.4	2.9 4.4 5.4	V	I_{OUT} = −50 μA
		3.0 4.5 5.5	– – –	2.56 3.86 4.86	2.46 3.76 4.76	V	*V_{IN} = V_{IL} or V_{IH} I_{OH} −12 mA −24 mA −24 mA
V_{OL}	Maximum Low Level Output Voltage	3.0 4.5 5.5	0.002 0.001 0.001	0.1 0.1 0.1	0.1 0.1 0.1	V	I_{OUT} = 50 μA
		3.0 4.5 5.5	– – –	0.36 0.36 0.36	0.44 0.44 0.44	V	*V_{IN} = V_{IL} or V_{IH} I_{OL} 12 mA 24 mA 24 mA
I_{IN}	Maximum Input Leakage Current	5.5	–	±0.1	±1.0	μA	V_I = V_{CC}, GND
I_{OLD}	†Minimum Dynamic Output Current	5.5	–	–	75	mA	V_{OLD} = 1.65 V Max
I_{OHD}		5.5	–	–	−75	mA	V_{OHD} = 3.85 V Min
I_{CC}	Maximum Quiescent Supply Current	5.5	–	8.0	80	μA	V_{IN} = V_{CC} or GND

*All outputs loaded; thresholds on input associated with output under test.
†Maximum test duration 2.0 ms, one output loaded at a time.

NOTE: I_{IN} and I_{CC} @ 3.0 V are guaranteed to be less than or equal to the respective limit @ 5.5 V V_{CC}.

AC CHARACTERISTICS

Symbol	Parameter	V_{CC}* (V)	74AC T_A = +25°C C_L = 50 pF Min	Typ	Max	74AC T_A = −40°C to +85°C C_L = 50 pF Min	Max	Unit
t_{PLH}	Propagation Delay A_n to $\overline{O}_n$	3.3 5.0	1.5 1.5	8.5 6.5	13.0 9.5	1.5 1.5	15.0 10.5	ns
t_{PHL}	Propagation Delay A_n to $\overline{O}_n$	3.3 5.0	1.5 1.5	8.0 6.0	12.5 9.0	1.5 1.5	14.0 10.5	ns
t_{PLH}	Propagation Delay $\overline{E}_1$ or $\overline{E}_2$ to $\overline{O}_n$	3.3 5.0	1.5 1.5	11.0 8.0	15.0 11.0	1.5 1.5	16.0 12.0	ns
t_{PHL}	Propagation Delay $\overline{E}_1$ or $\overline{E}_2$ to $\overline{O}_n$	3.3 5.0	1.5 1.5	9.5 7.0	13.5 9.5	1.5 1.5	15.0 10.5	ns
t_{PLH}	Propagation Delay E_3 to $\overline{O}_n$	3.3 5.0	1.5 1.5	11.0 8.0	15.5 11.0	1.5 1.5	16.5 12.5	ns
t_{PHL}	Propagation Delay E_3 to $\overline{O}_n$	3.3 5.0	1.5 1.5	8.5 6.0	13.0 8.0	1.5 1.0	14.0 9.5	ns

*Voltage Range 3.3 V is 3.3 V ±0.3 V.
*Voltage Range 5.0 V is 5.0 V ±0.5 V.

DC CHARACTERISTICS

Symbol	Parameter	V_{CC} (V)	74ACT T_A = +25°C Typ	74ACT T_A = −40°C to +85°C Guaranteed Limits		Unit	Conditions
V_{IH}	Minimum High Level Input Voltage	4.5 5.5	1.5 1.5	2.0 2.0	2.0 2.0	V	V_{OUT} = 0.1 V or V_{CC} − 0.1 V
V_{IL}	Maximum Low Level Input Voltage	4.5 5.5	1.5 1.5	0.8 0.8	0.8 0.8	V	V_{OUT} = 0.1 V or V_{CC} − 0.1 V
V_{OH}	Minimum High Level Output Voltage	4.5 5.5	4.49 5.49	4.4 5.4	4.4 5.4	V	I_{OUT} = −50 μA
		4.5 5.5	– –	3.86 4.86	3.76 4.76	V	*V_{IN} = V_{IL} or V_{IH} I_{OH} −24 mA −24 mA
V_{OL}	Maximum Low Level Output Voltage	4.5 5.5	0.001 0.001	0.1 0.1	0.1 0.1	V	I_{OUT} = 50 μA
		4.5 5.5	– –	0.36 0.36	0.44 0.44	V	*V_{IN} = V_{IL} or V_{IH} I_{OL} 24 mA 24 mA
I_{IN}	Maximum Input Leakage Current	5.5	–	±0.1	±1.0	μA	V_I = V_{CC}, GND
ΔI_{CCT}	Additional Max. I_{CC}/Input	5.5	0.6	–	1.5	mA	V_I = V_{CC} − 2.1 V
I_{OLD}	†Minimum Dynamic Output Current	5.5	–	–	75	mA	V_{OLD} = 1.65 V Max
I_{OHD}		5.5	–	–	−75	mA	V_{OHD} = 3.85 V Min
I_{CC}	Maximum Quiescent Supply Current	5.5	–	8.0	80	μA	V_{IN} = V_{CC} or GND

*All outputs loaded; thresholds on input associated with output under test.
†Maximum test duration 2.0 ms, one output loaded at a time.

AC CHARACTERISTICS

Symbol	Parameter	V_{CC}* (V)	74ACT T_A = +25°C C_L = 50 pF Min	Typ	Max	74ACT T_A = −40°C to +85°C C_L = 50 pF Min	Max	Unit
t_{PLH}	Propagation Delay A_n to $\overline{O}_n$	5.0	1.5	7.0	10.5	1.5	11.5	ns
t_{PHL}	Propagation Delay A_n to $\overline{O}_n$	5.0	1.5	6.5	10.5	1.5	11.5	ns
t_{PLH}	Propagation Delay $\overline{E}_1$ or $\overline{E}_2$ to $\overline{O}_n$	5.0	2.5	8.0	11.5	2.0	12.5	ns
t_{PHL}	Propagation Delay $\overline{E}_1$ or $\overline{E}_2$ to $\overline{O}_n$	5.0	2.0	7.5	11.5	2.0	12.5	ns
t_{PLH}	Propagation Delay E_3 to $\overline{O}_n$	5.0	2.5	8.0	12.0	2.0	13.0	ns
t_{PHL}	Propagation Delay E_3 to $\overline{O}_n$	5.0	2.0	6.5	10.5	1.5	11.5	ns

*Voltage Range 5.0 V is 5.0 V ± 0.5 V

CAPACITANCE

Symbol	Parameter	Value Typ	Unit	Test Conditions
C_{IN}	Input Capacitance	4.5	pF	V_{CC} = 5.0 V
C_{PD}	Power Dissipation Capacitance	60	pF	V_{CC} = 5.0 V

ORDERING INFORMATION

Device Order Number	Marking	Package	Shipping†
MC74AC138DG	AC138	SOIC−16 (Pb−Free)	48 Units / Rail
MC74AC138DR2G	AC138	SOIC−16 (Pb−Free)	2500 Tape & Reel
MC74AC138DTR2G	AC 138	TSSOP−16 (Pb−Free)	2500 Tape & Reel
MC74ACT138DG	ACT138	SOIC−16 (Pb−Free)	48 Units / Rail
MC74ACT138DR2G	ACT138	SOIC−16 (Pb−Free)	2500 Tape & Reel
MC74ACT138DR2G−Q*	ACT138	SOIC−16 (Pb−Free)	2500 Tape & Reel
MC74ACT138DTR2G	ACT 138	TSSOP−16 (Pb−Free)	2500 Tape & Reel

†For information on tape and reel specifications, including part orientation and tape sizes, please refer to our Tape and Reel Packaging Specifications Brochure, BRD8011/D.

*−Q Suffix for Automotive and Other Applications Requiring Unique Site and Control Change Requirements; AEC−Q100 Qualified and PPAP Capable.

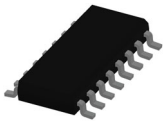

SOIC−16 9.90x3.90x1.37 1.27P
CASE 751B
ISSUE M

DATE 18 OCT 2024

NOTES:
1. DIMENSIONING AND TOLERANCING PER ASME Y14.5M, 2018.
2. DIMENSION IN MILLIMETERS. ANGLE IN DEGREES.
3. DIMENSIONS D AND E1 DO NOT INCLUDE MOLD PROTRUSION.
4. MAXIMUM MOLD PROTRUSION 0.15mm PER SIDE.
5. DIMENSION b DOES NOT INCLUDE DAMBAR PROTRUSION. ALLOWABLE DAMBAR PROTRUSION SHALL BE 0.127mm TOTAL IN EXCESS OF THE b DIMENSION AT MAXIMUM MATERIAL CONDITION.

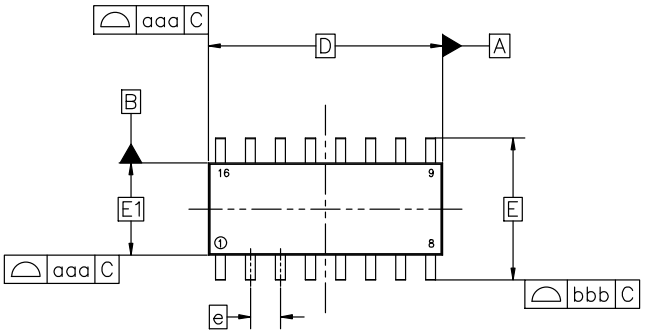

TOP VIEW

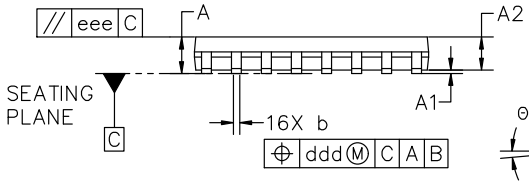

SIDE VIEW

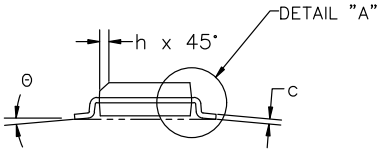

END VIEW

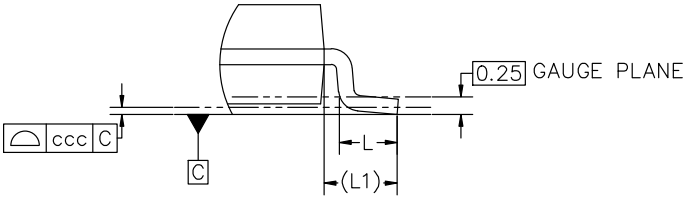

DETAIL "A"
Scale 3:1

MILLIMETERS			
DIM	MIN	NOM	MAX
A	1.35	1.55	1.75
A1	0.10	0.18	0.25
A2	1.25	1.37	1.50
b	0.35	0.42	0.49
c	0.19	0.22	0.25
D	9.90 BSC		
E	6.00 BSC		
E1	3.90 BSC		
e	1.27 BSC		
h	0.25	---	0.50
L	0.40	0.83	1.25
L1	1.05 REF		
Θ	0°	---	7°
TOLERANCE OF FORM AND POSITION			
aaa	0.10		
bbb	0.20		
ccc	0.10		
ddd	0.25		
eee	0.10		

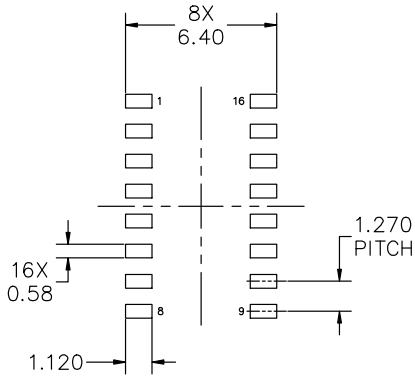

RECOMMENDED MOUNTING FOOTPRINT

*FOR ADDITIONAL INFORMATION ON OUR PB−FREE STRATEGY AND SOLDERING DETAILS, PLEASE DOWNLOAD THE onsemi SOLDERING AND MOUNTING TECHNIQUES REFERENCE MANUAL, SOLDERRM/D

DOCUMENT NUMBER:	98ASB42566B	Electronic versions are uncontrolled except when accessed directly from the Document Repository. Printed versions are uncontrolled except when stamped "CONTROLLED COPY" in red.
DESCRIPTION:	SOIC−16 9.90X3.90X1.37 1.27P	PAGE 1 OF 2

onsemi and onsemi are trademarks of Semiconductor Components Industries, LLC dba **onsemi** or its subsidiaries in the United States and/or other countries. **onsemi** reserves the right to make changes without further notice to any products herein. **onsemi** makes no warranty, representation or guarantee regarding the suitability of its products for any particular purpose, nor does **onsemi** assume any liability arising out of the application or use of any product or circuit, and specifically disclaims any and all liability, including without limitation special, consequential or incidental damages. **onsemi** does not convey any license under its patent rights nor the rights of others.

SOIC−16 9.90x3.90x1.37 1.27P
CASE 751B
ISSUE M

DATE 18 OCT 2024

GENERIC MARKING DIAGRAM*

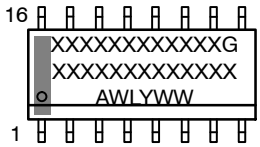

XXXXX = Specific Device Code
A = Assembly Location
WL = Wafer Lot
Y = Year
WW = Work Week
G = Pb−Free Package

*This information is generic. Please refer to device data sheet for actual part marking. Pb−Free indicator, “G” or microdot “▪”, may or may not be present. Some products may not follow the Generic Marking.

STYLE 1:

PIN 1.	COLLECTOR
2.	BASE
3.	EMITTER
4.	NO CONNECTION
5.	EMITTER
6.	BASE
7.	COLLECTOR
8.	COLLECTOR
9.	BASE
10.	EMITTER
11.	NO CONNECTION
12.	EMITTER
13.	BASE
14.	COLLECTOR
15.	EMITTER
16.	COLLECTOR

STYLE 2:

PIN 1.	CATHODE
2.	ANODE
3.	NO CONNECTION
4.	CATHODE
5.	CATHODE
6.	NO CONNECTION
7.	ANODE
8.	CATHODE
9.	CATHODE
10.	ANODE
11.	NO CONNECTION
12.	CATHODE
13.	CATHODE
14.	NO CONNECTION
15.	ANODE
16.	CATHODE

STYLE 3:

PIN 1.	COLLECTOR, DYE #1
2.	BASE, #1
3.	EMITTER, #1
4.	COLLECTOR, #1
5.	COLLECTOR, #2
6.	BASE, #2
7.	EMITTER, #2
8.	COLLECTOR, #2
9.	COLLECTOR, #3
10.	BASE, #3
11.	EMITTER, #3
12.	COLLECTOR, #3
13.	COLLECTOR, #4
14.	BASE, #4
15.	EMITTER, #4
16.	COLLECTOR, #4

STYLE 4:

PIN 1.	COLLECTOR, DYE #1
2.	COLLECTOR, #1
3.	COLLECTOR, #2
4.	COLLECTOR, #2
5.	COLLECTOR, #3
6.	COLLECTOR, #3
7.	COLLECTOR, #4
8.	COLLECTOR, #4
9.	BASE, #4
10.	EMITTER, #4
11.	BASE, #3
12.	EMITTER, #3
13.	BASE, #2
14.	EMITTER, #2
15.	BASE, #1
16.	EMITTER, #1

STYLE 5:

PIN 1.	DRAIN, DYE #1
2.	DRAIN, #1
3.	DRAIN, #2
4.	DRAIN, #2
5.	DRAIN, #3
6.	DRAIN, #3
7.	DRAIN, #4
8.	DRAIN, #4
9.	GATE, #4
10.	SOURCE, #4
11.	GATE, #3
12.	SOURCE, #3
13.	GATE, #2
14.	SOURCE, #2
15.	GATE, #1
16.	SOURCE, #1

STYLE 6:

PIN 1.	CATHODE
2.	CATHODE
3.	CATHODE
4.	CATHODE
5.	CATHODE
6.	CATHODE
7.	CATHODE
8.	CATHODE
9.	ANODE
10.	ANODE
11.	ANODE
12.	ANODE
13.	ANODE
14.	ANODE
15.	ANODE
16.	ANODE

STYLE 7:

PIN 1.	SOURCE N-CH
2.	COMMON DRAIN (OUTPUT)
3.	COMMON DRAIN (OUTPUT)
4.	GATE P-CH
5.	COMMON DRAIN (OUTPUT)
6.	COMMON DRAIN (OUTPUT)
7.	COMMON DRAIN (OUTPUT)
8.	SOURCE P-CH
9.	SOURCE P-CH
10.	COMMON DRAIN (OUTPUT)
11.	COMMON DRAIN (OUTPUT)
12.	COMMON DRAIN (OUTPUT)
13.	GATE N-CH
14.	COMMON DRAIN (OUTPUT)
15.	COMMON DRAIN (OUTPUT)
16.	SOURCE N-CH

onsemi and onsemi are trademarks of Semiconductor Components Industries, LLC dba **onsemi** or its subsidiaries in the United States and/or other countries. **onsemi** reserves the right to make changes without further notice to any products herein. **onsemi** makes no warranty, representation or guarantee regarding the suitability of its products for any particular purpose, nor does **onsemi** assume any liability arising out of the application or use of any product or circuit, and specifically disclaims any and all liability, including without limitation special, consequential or incidental damages. **onsemi** does not convey any license under its patent rights nor the rights of others.

© Semiconductor Components Industries, LLC, 2019

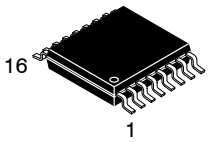

SCALE 2:1

TSSOP−16 WB
CASE 948F
ISSUE B

DATE 19 OCT 2006

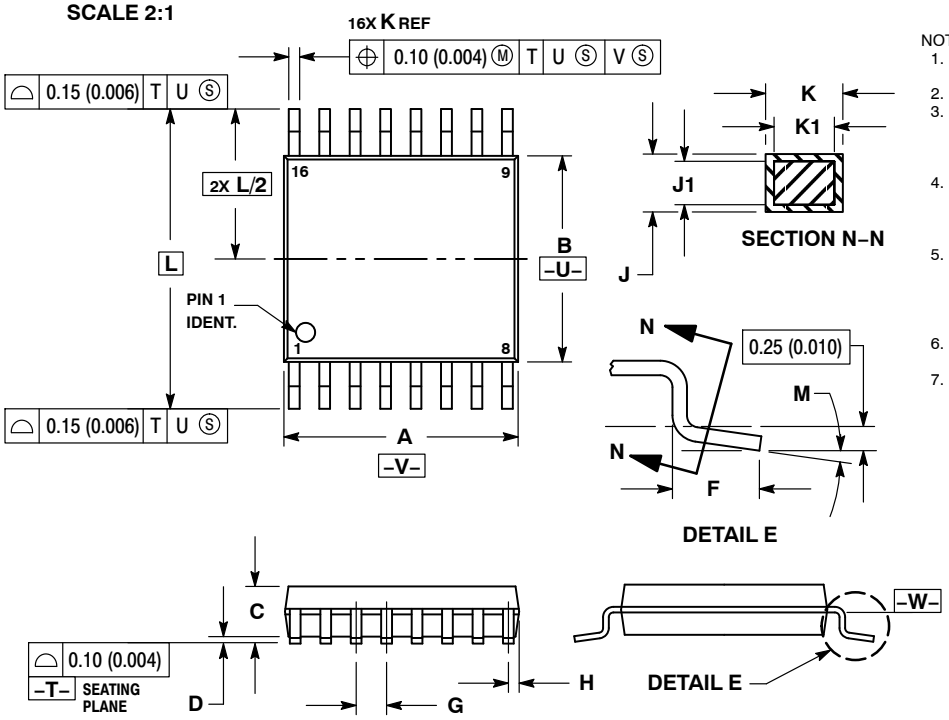

NOTES:
1. DIMENSIONING AND TOLERANCING PER ANSI Y14.5M, 1982.
2. CONTROLLING DIMENSION: MILLIMETER.
3. DIMENSION A DOES NOT INCLUDE MOLD FLASH. PROTRUSIONS OR GATE BURRS. MOLD FLASH OR GATE BURRS SHALL NOT EXCEED 0.15 (0.006) PER SIDE.
4. DIMENSION B DOES NOT INCLUDE INTERLEAD FLASH OR PROTRUSION. INTERLEAD FLASH OR PROTRUSION SHALL NOT EXCEED 0.25 (0.010) PER SIDE.
5. DIMENSION K DOES NOT INCLUDE DAMBAR PROTRUSION. ALLOWABLE DAMBAR PROTRUSION SHALL BE 0.08 (0.003) TOTAL IN EXCESS OF THE K DIMENSION AT MAXIMUM MATERIAL CONDITION.
6. TERMINAL NUMBERS ARE SHOWN FOR REFERENCE ONLY.
7. DIMENSION A AND B ARE TO BE DETERMINED AT DATUM PLANE −W−.

	MILLIMETERS		INCHES	
DIM	MIN	MAX	MIN	MAX
A	4.90	5.10	0.193	0.200
B	4.30	4.50	0.169	0.177
C	−−−	1.20	−−−	0.047
D	0.05	0.15	0.002	0.006
F	0.50	0.75	0.020	0.030
G	0.65 BSC		0.026 BSC	
H	0.18	0.28	0.007	0.011
J	0.09	0.20	0.004	0.008
J1	0.09	0.16	0.004	0.006
K	0.19	0.30	0.007	0.012
K1	0.19	0.25	0.007	0.010
L	6.40 BSC		0.252 BSC	
M	0 °	8 °	0 °	8 °

RECOMMENDED SOLDERING FOOTPRINT*

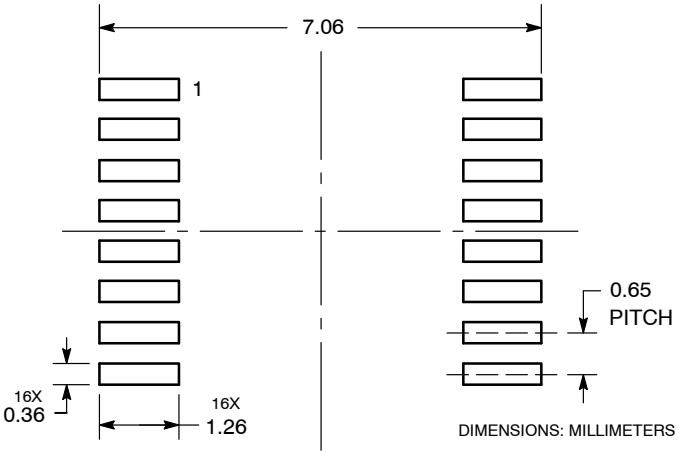

*For additional information on our Pb−Free strategy and soldering details, please download the **onsemi** Soldering and Mounting Techniques Reference Manual, SOLDERRM/D.

GENERIC MARKING DIAGRAM*

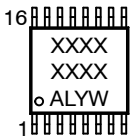

XXXX = Specific Device Code
A = Assembly Location
L = Wafer Lot
Y = Year
W = Work Week
G or ▪ = Pb−Free Package

*This information is generic. Please refer to device data sheet for actual part marking. Pb−Free indicator, “G” or microdot “ ▪”, may or may not be present. Some products may not follow the Generic Marking.

DOCUMENT NUMBER:	98ASH70247A	Electronic versions are uncontrolled except when accessed directly from the Document Repository. Printed versions are uncontrolled except when stamped “CONTROLLED COPY” in red.
DESCRIPTION:	TSSOP−16	PAGE 1 OF 1

onsemi and onsemi are trademarks of Semiconductor Components Industries, LLC dba **onsemi** or its subsidiaries in the United States and/or other countries. **onsemi** reserves the right to make changes without further notice to any products herein. **onsemi** makes no warranty, representation or guarantee regarding the suitability of its products for any particular purpose, nor does **onsemi** assume any liability arising out of the application or use of any product or circuit, and specifically disclaims any and all liability, including without limitation special, consequential or incidental damages. **onsemi** does not convey any license under its patent rights nor the rights of others.

onsemi, onsemi, and other names, marks, and brands are registered and/or common law trademarks of Semiconductor Components Industries, LLC dba "**onsemi**" or its affiliates and/or subsidiaries in the United States and/or other countries. **onsemi** owns the rights to a number of patents, trademarks, copyrights, trade secrets, and other intellectual property. A listing of **onsemi**'s product/patent coverage may be accessed at www.onsemi.com/site/pdf/Patent−Marking.pdf. **onsemi** reserves the right to make changes at any time to any products or information herein, without notice. The information herein is provided "as−is" and **onsemi** makes no warranty, representation or guarantee regarding the accuracy of the information, product features, availability, functionality, or suitability of its products for any particular purpose, nor does **onsemi** assume any liability arising out of the application or use of any product or circuit, and specifically disclaims any and all liability, including without limitation special, consequential or incidental damages. Buyer is responsible for its products and applications using **onsemi** products, including compliance with all laws, regulations and safety requirements or standards, regardless of any support or applications information provided by **onsemi**. "Typical" parameters which may be provided in **onsemi** data sheets and/or specifications can and do vary in different applications and actual performance may vary over time. All operating parameters, including "Typicals" must be validated for each customer application by customer's technical experts. **onsemi** does not convey any license under any of its intellectual property rights nor the rights of others. **onsemi** products are not designed, intended, or authorized for use as a critical component in life support systems or any FDA Class 3 medical devices or medical devices with a same or similar classification in a foreign jurisdiction or any devices intended for implantation in the human body. Should Buyer purchase or use **onsemi** products for any such unintended or unauthorized application, Buyer shall indemnify and hold **onsemi** and its officers, employees, subsidiaries, affiliates, and distributors harmless against all claims, costs, damages, and expenses, and reasonable attorney fees arising out of, directly or indirectly, any claim of personal injury or death associated with such unintended or unauthorized use, even if such claim alleges that **onsemi** was negligent regarding the design or manufacture of the part. **onsemi** is an Equal Opportunity/Affirmative Action Employer. This literature is subject to all applicable copyright laws and is not for resale in any manner.

ADDITIONAL INFORMATION

TECHNICAL PUBLICATIONS:
Technical Library: www.onsemi.com/design/resources/technical−documentation
onsemi Website: www.onsemi.com

ONLINE SUPPORT: www.onsemi.com/support
For additional information, please contact your local Sales Representative at
www.onsemi.com/support/sales